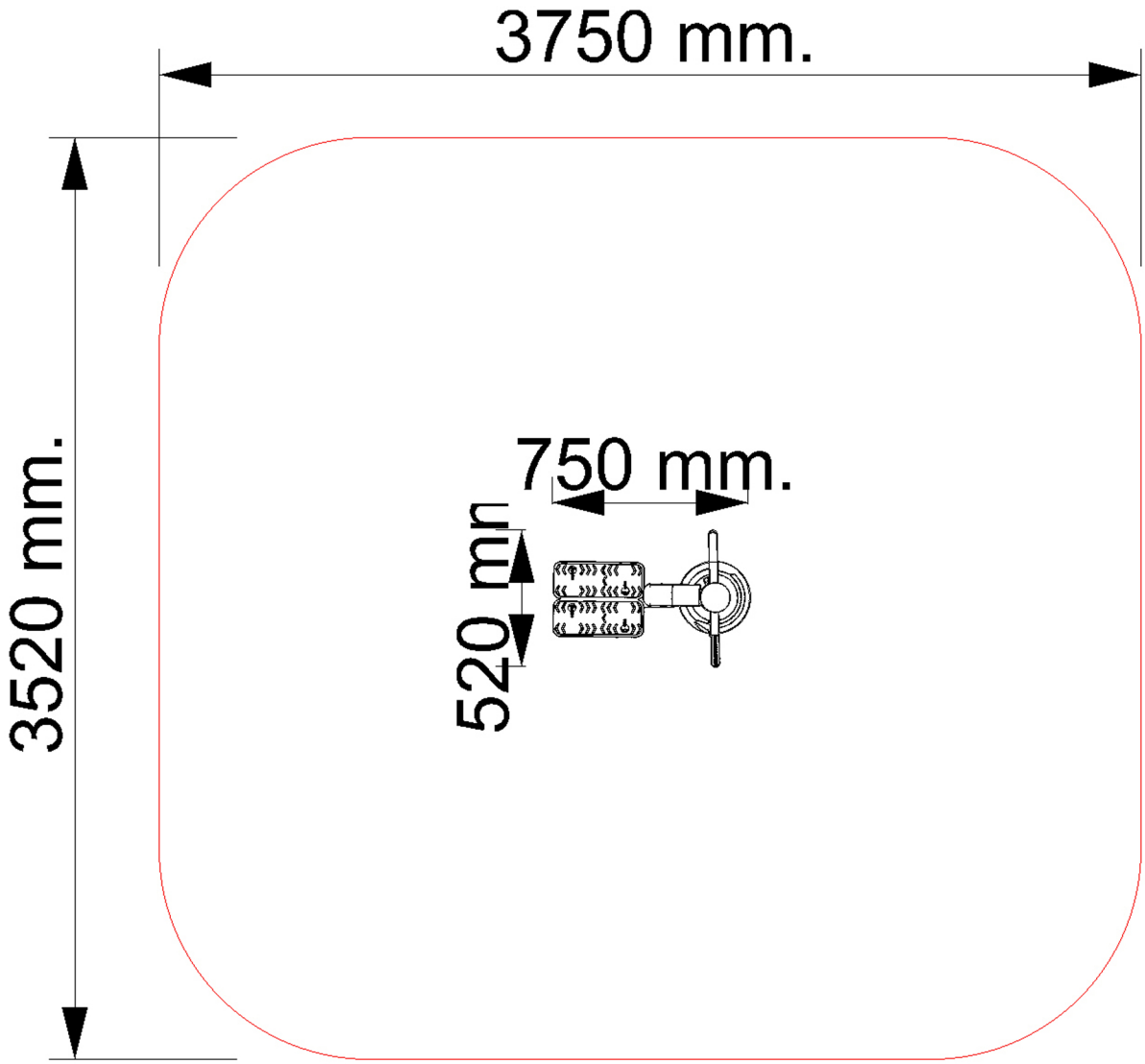
3750 mm.
3520 mm.
750 mm.
520 mm

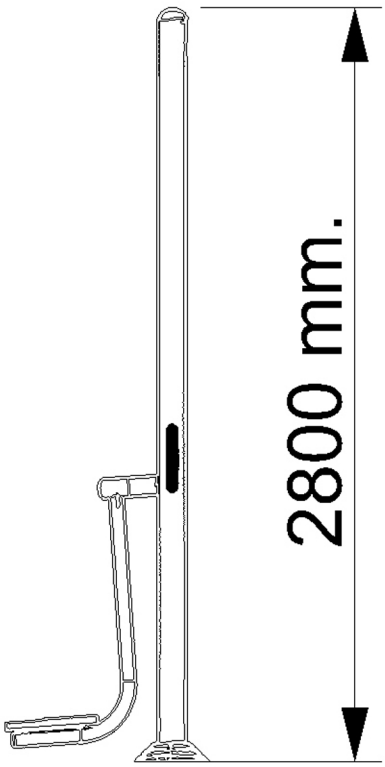
2800 mm.