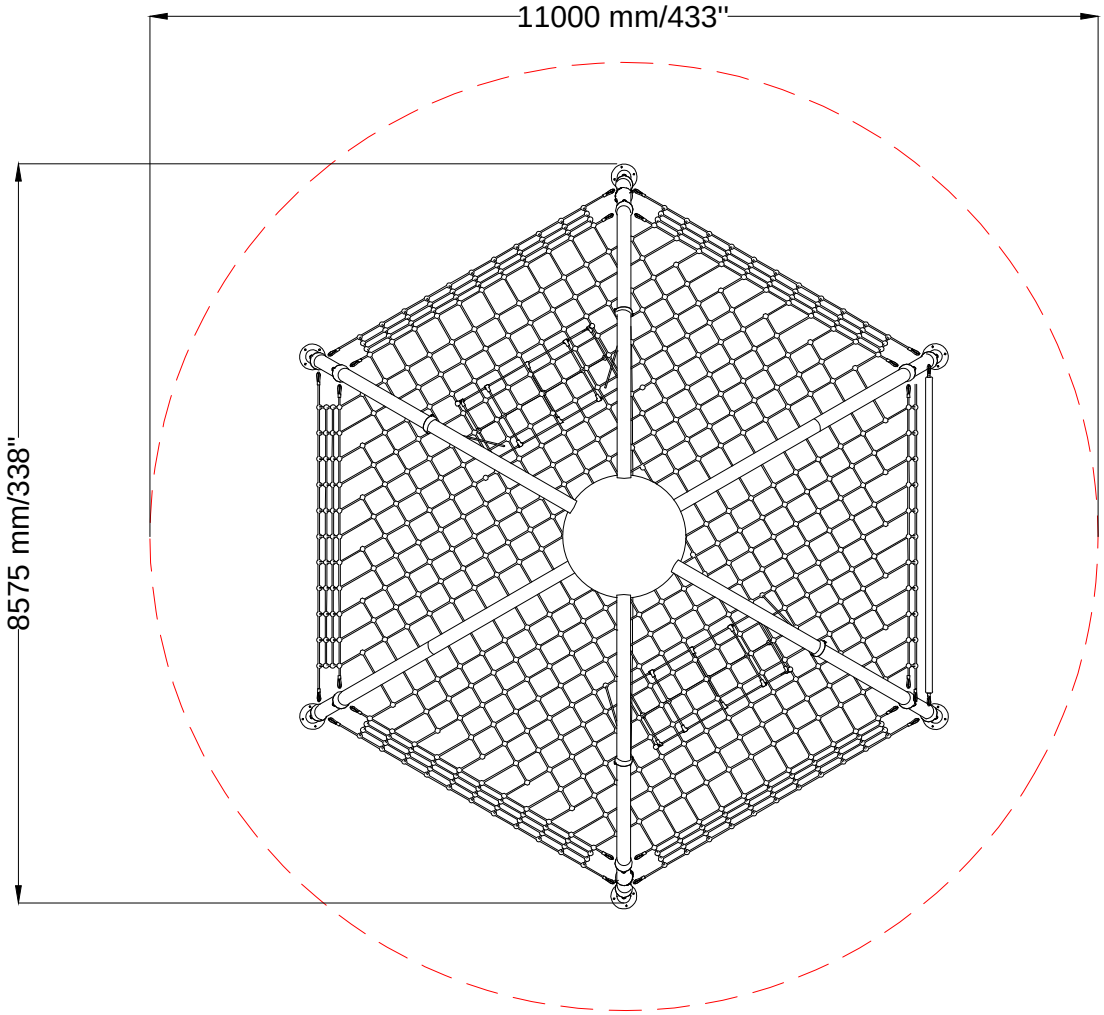
11000 mm/433"
8575 mm/338"

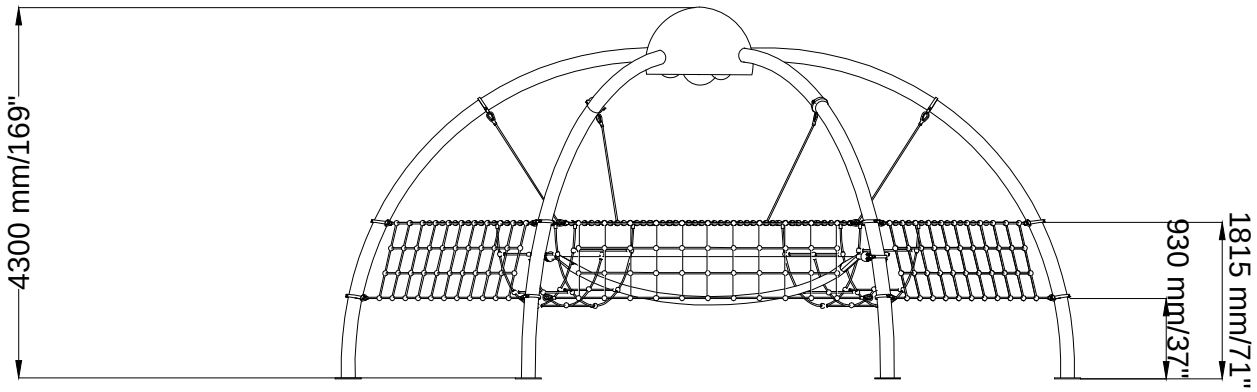
4300 mm/169"
930 mm/37"
1815 mm/71"